Prototype
Replica Model Railway Products PRMRP

Stockists of 7mm Modern Image Kits

Peter Besant
Tel – 07807225801
prmrp@fsmail.net
www.prmrp.com

BRL-007
Detailing and Conversion Kit for NOVO/Triang Class 35 Hymek

Building Instructions

SCALE MODEL PRODUCT FOR ADULT MODELLERS ONLY.
WHITE METAL CONTAINS LEAD - WASH HANDS AFTER USE.
MAY CONTAIN SMALL PARTS. ETCHED BRASS HAS FUNCTIONAL SHARP EDGES - HANDLE WITH EXTREME CARE

Thank you for purchasing this kit.

This instruction pack should provide a guide for building this model given some experience of soldering and the basics of etched kit construction.

Please read all the pack before starting to build.

Drawings and photos are essential for builders to acquaint themselves with the prototype they wish to model.

This instruction pack should provide an easy to follow guide when converting the Triang/Novo Hymek toy to a highly detailed scale model.

It is worth mentioning at the outset that when obtaining a Triang/Novo Hymek if possible buy the Triang one. This is because the Novo version was made from a plastic that is brittle and difficult to file, cut and drill. The Triang version is recognisable by having the words ‘Blue Flier’ embossed on the sides whereas the Novo version has a rectangular raised section in its plate.

For builders of modern image in 7mm, consider joining MIGO+1, the Modern Image Gauge 0/1 organisation. For more details see the MIGO+1 website @ www.migo.org

Transfers are available from Fox Transfers.

MOTOR BOGIES.

Introduction.

The motor bogies in this range of models are of a standard type with an inner 'U' section chassis and outer cosmetic bogie sideframes. The steel wheels have a small nylon bush at one end of the axle to allow pick up via the live chassis.

The model will run on one motor but for increased traction and better adhesion, the use of two motors plus a Delrin chain set is recommended. When assembling the bogies remember that although the motors as supplied have fixing screws, the motor body may not be tapped to take them. See Motors, Gears and Delrin.

Ensure that the insulated wheels on bogie one are opposite those on bogie two.

Construction.

The Chassis.
Bearings and Wheels
Motors, Gears and Delrin
Sideframes and Castings.

The Chassis.

Fold the chassis e1 noting that the bulkhead is an integral part and is folded and soldered where marked by the half etched lines on the chassis. Now the saddles e2 and e6 can be folded and soldered into place noting that these determine the wheelbase of 74.5mm and the bogie centre dimension of 178mm relates to a point halfway between the axles on the two bogies. The pivot overlay e9 can now be folded and soldered on the top as shown, however if the body sits too high, it may be necessary to omit this item. The key to decide this is that the buffers are the correct height above the rail.

Bearings and Wheels.

For the wheels to be true and level, the top hat bearings must be soldered in on a flat surface such as a piece of plate glass. The bearing holes may need enlarging and a tapered reamer is ideal for this.

Fit the bearings and wheels and when happy that everything is true and square, solder into place. The pin points on the axles have to be removed until they are flush with the wheels. Remember when fitting wheels that the fibre washers are placed at the insulating wheel end to prevent shorting.

Motors, Gears and Delrin. (Not supplied in kit)

The can motors as supplied have fixing screws but the motor body may not be tapped to take them. Dismantling them is an easy task as described below.
Simply remove the brushes and springs from top of motor and prise back the two securing lugs. Pull up the motor top and remove the armature noting the number of packing washers under it. Tap the holes 2.5mm and be sure to remove all the swarf.

Re-assembly is the reverse of above.

Now check that the fixing holes in chassis top line up with motor and enlarge if necessary. The brass sleeve m9 fits inside the steel worm m10 ensuring that it is proud by 2.5mm at the shouldered end. For the worm to grip onto the motor shaft , use a 3/32 drill and bore a hole through the brass sleeve in the side of the worm and tap 6BA.

By enlarging the hole in the chassis top, the motor complete with worm can be fitted or removed with ease. Fit the motor followed by driving axle and brass gear m11 adjusting as necessary to produce a good mesh. Sometimes, inserting a shim of scrap brass between one end of the motor and saddle can improve this. Fix solder tags m2 to inside ends of chassis. Before continuing it is advisable to test the bogies.

Fit wheels, attach wires and couple up to a nylon terminal block. If the motors turn in different directions swap the motor wires on one bogie.
Note : Do not fix the Delrin cogs at this stage as once in place they are not easily removed, and if fitting brake shoes see 'sideframes and castings' before painting the chassis and fitting Delrin.

The chassis can now be dismantled and along with the wheels, painted before final assembly. If fitting Delrin note:

- that the cogs are in line with the bulkhead cut-outs
- you may have to file either the shank of the cog or the inner face of the bearing if there is insufficient room on the driving axle.

The bogies can now be reassembled.
Useful Tip : Use Loctite Lock 'n' seal to prevent the wheels unscrewing.

Side frames and Castings.
Study the sideframes c7 and open out any holes that are not formed completely.
The crossbrace c8 fits into holes at the ends of the sideframes and the rectangular section sits inside the ends of the chassis e1. The leaf spring c9 sits centrally on the sideframe below the raised area and is soldered from behind. Fit the air cylinders c10 where shown and the sandboxes c11 which are handed. The bogie steps c12 fit next to the axleboxes and should line up with the cab door on the body. If fitting brake shoes, note that there are some with cylinders, c14 and some without, c13 . The ones with the cylinders (c14) fir on the outer ends of the bogies. They can either be soldered to the rear of the side frames, or by using 0.7mm wire and referring to A1 & A2, built up as follows.
Drill though the shoes as shown at A2 using a .7mm drill then place the shoes in position on the chassis ensuring there is adequate clearance and drill through as shown at A1.
Fit .7mm wire, trial fit shoes then solder into position.

Note that if fitting Delrin chain, it is preferable to fit the shoes onto the sideframes.

After painting the completed sideframes, solder to the chassis ensuring the axleboxes line up with wheels both vertically and horizontally. Now the completed bogies can be laid to one side until the body conversion is complete.

Body Conversion.
As previously mentioned, use the Triang body as this is made from a type of plastic that is easier to work on. Unscrew the roof, unclip the cab window assemblies and fuel tanks and discard both bogies by drilling out the rivets.

Bodyshell
Looking at the now dismantled body, start by removing the 'Blue Flier' name/rectangular raised plate from the bodyside. Now the moulded handrails can be chiselled away (a small sharpened screwdriver is ideal for this) to reveal the recesses below. Cut off the marker lights and cab front handrails then chain drill and file out the route indicator box. Looking at the body from underneath, remove the battery housings by chain drilling and filing but retain the centre section for rigidity. The cab floors can now be removed by the same method, retaining the bulkheads. Bufferbeam castings c2 needs studying before

removing the old ones from the body. Drill out the engine room windows and open out the step holes beneath the cab doors to 8mm x 4mm. Moving on to the cab ends, remove the moulded handrails from the sides, then the moulded roof horns and vents. If using a flush glazing kit, chamfer the inside window frames and trial fit.

Several apertures have to be drilled out and filed on the roof, and the illustration shows their position. The circular holes are 5mm in diameter, rectangular holes towards 'B' end 5mm x 8mm and rectangular hole towards 'A' end is 5mm x 3mm. The roof fan grille is in the wrong place so cut a card template 38mm in diameter and reposition approx 5mm to the side as shown.

Rebuilding.

Cut the brass channel to 248mm and fold up, this sits along the bottom of the body, then sand both channel and body before fixing with an epoxy glue (bulldog clips are useful here to hold the parts together). Laminate by soldering the bogie mounting stretchers e4 and e5 together, noting that the sides of e4 are folded up. Solder the nut m4 centrally over the hole on the inside of the pivot box e3 then fold and solder this to e4. With the pivot holes in the top of the chassis being off centre allow for this when fitting the completed bogie stretchers to the body. The bogie centre to centre measurement is 178mm , this being taken from a point halfway between the two axles on each bogie. Finally stick the self adhesive insulating sheet onto the pivot box e3 cutting a hole for the nylon screw.

Using a polystyrene cement refix the main roof and cab ends back on to the locomotive, and a piece of 60 thou plasticard to fill the now redundant battery lever slot and file to shape when set. Solder the underframe tank sides c16 and ends c17 together and fix under the body, fitting the bogies into place will help position this.

The bufferstocks c1 are drilled out firstly to the diameter of the shank and then to a suitable depth and diameter of the Oleo section. The loop on buffer m1 may need to be carefully drilled out these being provided to accept a wire passed through a hole in the coupling hook and running to each buffer loop preventing the heads from revolving. Solder the stocks into place then fit the buffer beams on to the front of the loco. Some fettling and filing being necessary to achieve a good fit. For extra support for the stocks use the spiders e17 behind the buffer beam.

Cut the mesh to fit the repositioned roof van hole and fix into place. The fan blades e10 should be bent to 30 degrees and soldered to the bracket e11 that has strips on either side that are bent down and out to pass under opposite blades of the fan.

Position the completed assembly under the mesh with the strips glued to each side of the roof. If you wish to paint the fan, leave the assembly off until the model is painted then glue into place. Fill in the screw holes on the roof and add the rectangular roof vents c23 where shown, fit the marker lights c19 onto the cab fronts and prepare the model for painting.

After painting the remaining detail can be added starting with the buffer beam. Fit the buffers as described above, followed by the air pipes c3, m.u. terminals c4, steam heat pipes c5, vacuum pipes c6, lamp brackets c20 and drawbar plates e13 where indicated. If screw couplings (which are extra) are used, they are assembled with the spring and split pin behind the bufferbeam. The air tank c15 fits behind the buffer beam drilling two holes into the floor. Drill holes into the cab roof and fit the cab roof vent c22 and the roof horns c21 where indicated. Fit the glazing and add the engine room windows, then make and fit handrails, door handles, and windscreen wiper blades from nickel silver wire. Back the route indicators with black plasticard and apply running numerals. Interior detail can be

added by fixing the seats e12 and bases c18 together then fixing to the floors, made from plasticard or hardboard.

CLASS 35 ETCHS A & B

e1	Chassis	2	e9	Bogie Pivot	2
e2	Outer Saddle	2	e10	Fan	1
e3	Pivot Box	2	e11	Fan Bracket	1
e4	Folding stretcher	2	e12	Cab Seat	4
e5	Stretcher	2	e13	Drawbar Plate	2
e6	Motor End Saddle	2	e14	Handbrake Wheel	4
			e15	Windscreen Wiper	2
			e16	Window frame	4
			e17	Buffer Spider	4

Class 35 - the Castings

c1	Bufferstock	4
c2	Bufferbeam	2
c3	Airpipe	2 sets
c4	m.u. terminal	2 sets
c5	Steam heat pipe	2
c6	Vacuum pipe	2
c7	Bogie Sideframe	4
c8	Crossbrace	4
c9	Leaf Spring	4
c10	Air Cylinder	8
c11	Sandbox	4RH & 4LH
c12	Step	4
c13	Brake shoe	4RH & 4LH
c14	Brake shoe with Cyl.	4RH & 4LH
c15	Air Tank	2
c16	U/F tank side	2
c17	U/F tank end	2
c18	Cab seat base	4
c19	Marker light	4
c20	Lamp Bracket	4
c21	Cab roof horn	4
c22	Cab roof vent	2
c23	Rect. Roof vent	2

Class 35 - Miscellaneous Parts

M1	Lost wax buffer with spring	4
M2	Solder Tag	2
M3	Nut & Bolt for above	2
M4	Pivot box Nut	2
M5	Nylon Screw	2
M6	Brass wheel Bearing	8
M7	Can motor (extra to kit)	2
M8	Brass Sleeve (extra to kit)	2
M9	Steel worm (extra to kit)	
M10	Brass Gear (extra to kit)	
M11	Delrin Chain (extra to kit)	
M12	Delrin Cog (extra to kit)	
M13	Insul Pad	
M14	Steel wheel 3’9”(extra to kit)	
M15	Axle with ins. Wheel (extra to kit)	

Not illustrated: Brass channel, clear plastic, fibre washers, motor fixing screws, mesh. Worm and gear screws.

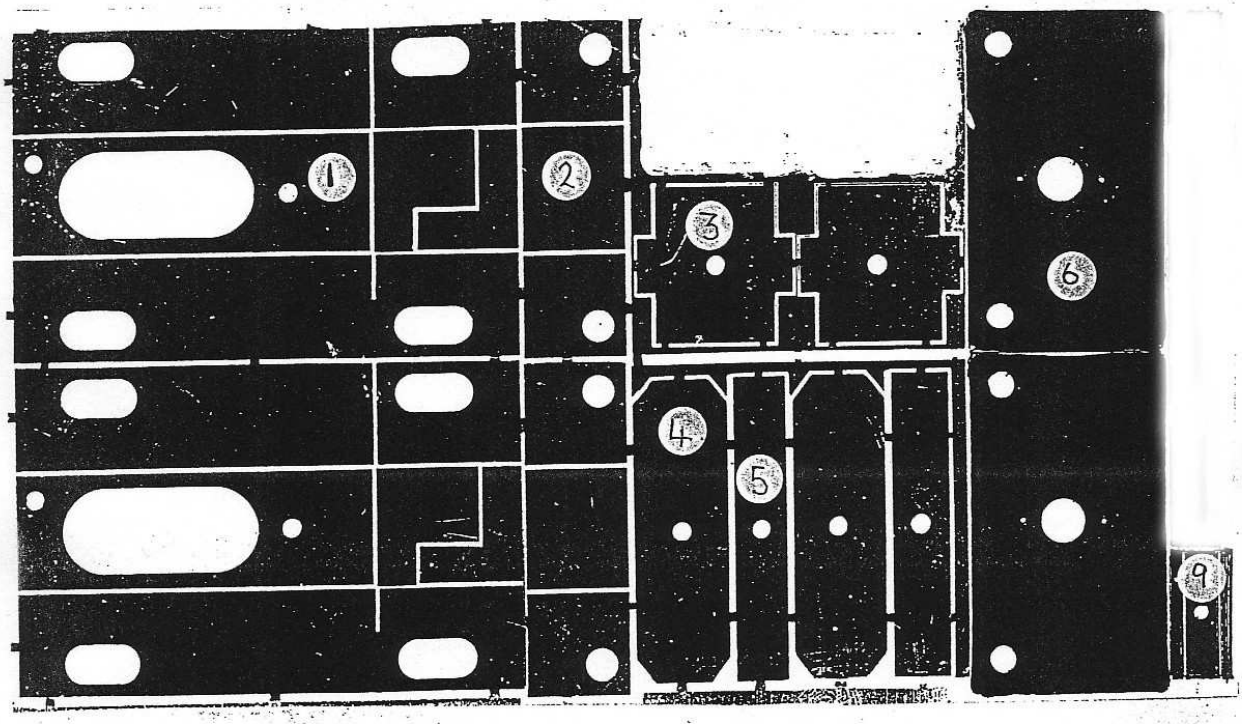

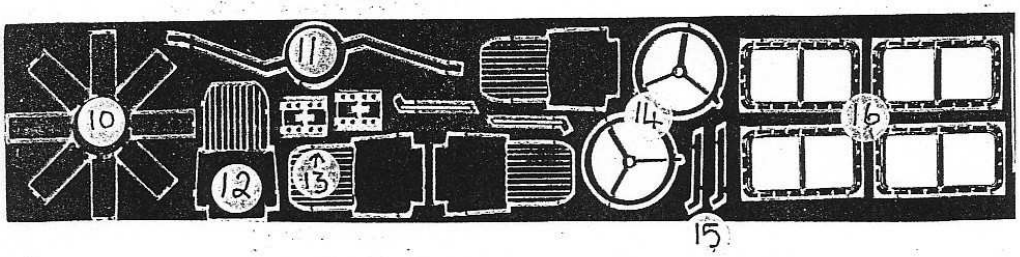

CLASS 35 ETCHS A & B

e1	Chassis	2	e9	Bogie Pivot	2
e2	Outer Saddle	2	e10	Fan	1
e3	Pivot Box	2	e11	Fan Bracket	1
e4	Folding stretcher	2	e12	Cab Seat	4
e5	Stretcher	2	e13	Drawbar Plate	2
e6	Motor End Saddle	2	e14	Handbrake Wheel	4
			e15	Windscreen Wiper	2
			e16	Window frame	4
			e17	Buffer Spider	4

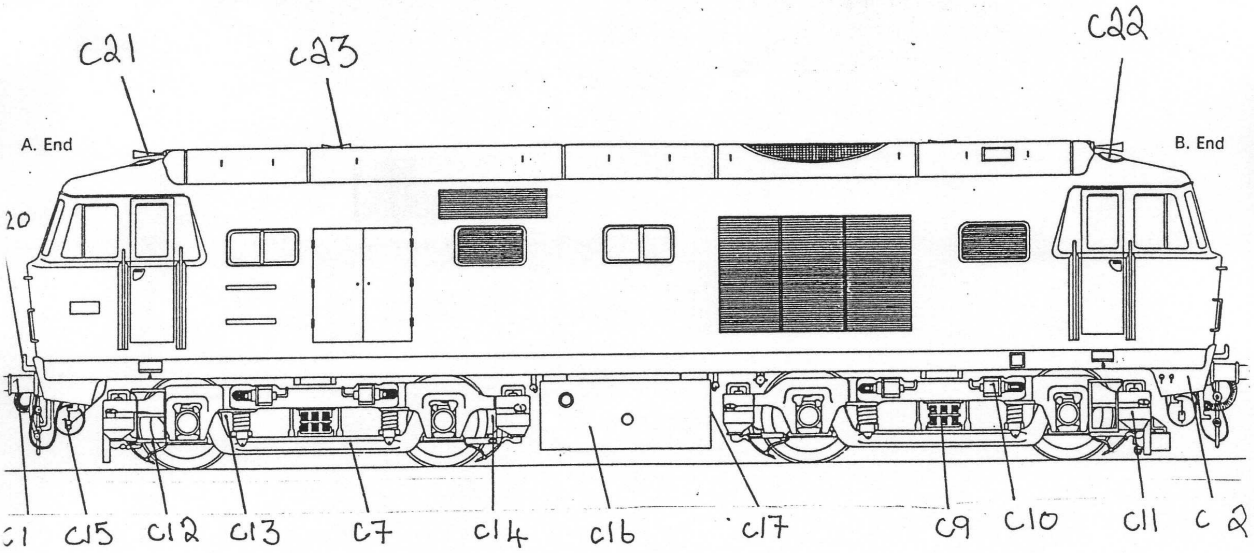

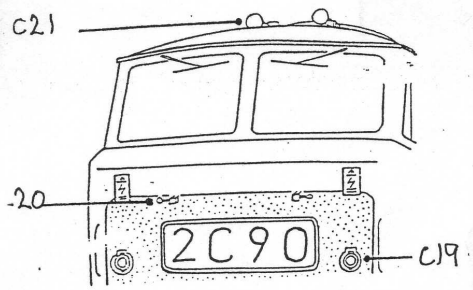

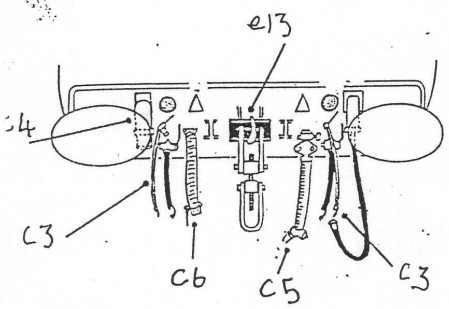

Class 35 - the Castings

c1	Bufferstock	4
c2	Bufferbeam	2
c3	Airpipe	2 sets
c4	m.u. terminal	2 sets
c5	Steam heat pipe	2
c6	Vacuum pipe	2
c7	Bogie Sideframe	4
c8	Crossbrace	4
c9	Leaf Spring	4
c10	Air Cylinder	8
c11	Sandbox	4RH & 4LH
c12	Step	4
c13	Brake shoe	4RH & 4LH
c14	Brake shoe with Cyl.	4RH & 4LH
c15	Air Tank	2
c16	U/F tank side	2
c17	U/F tank end	2
c18	Cab seat base	4
c19	Marker light	4
c20	Lamp Bracket	4
c21	Cab roof horn	4
c22	Cab roof vent	2
c23	Rect. Roof vent	2

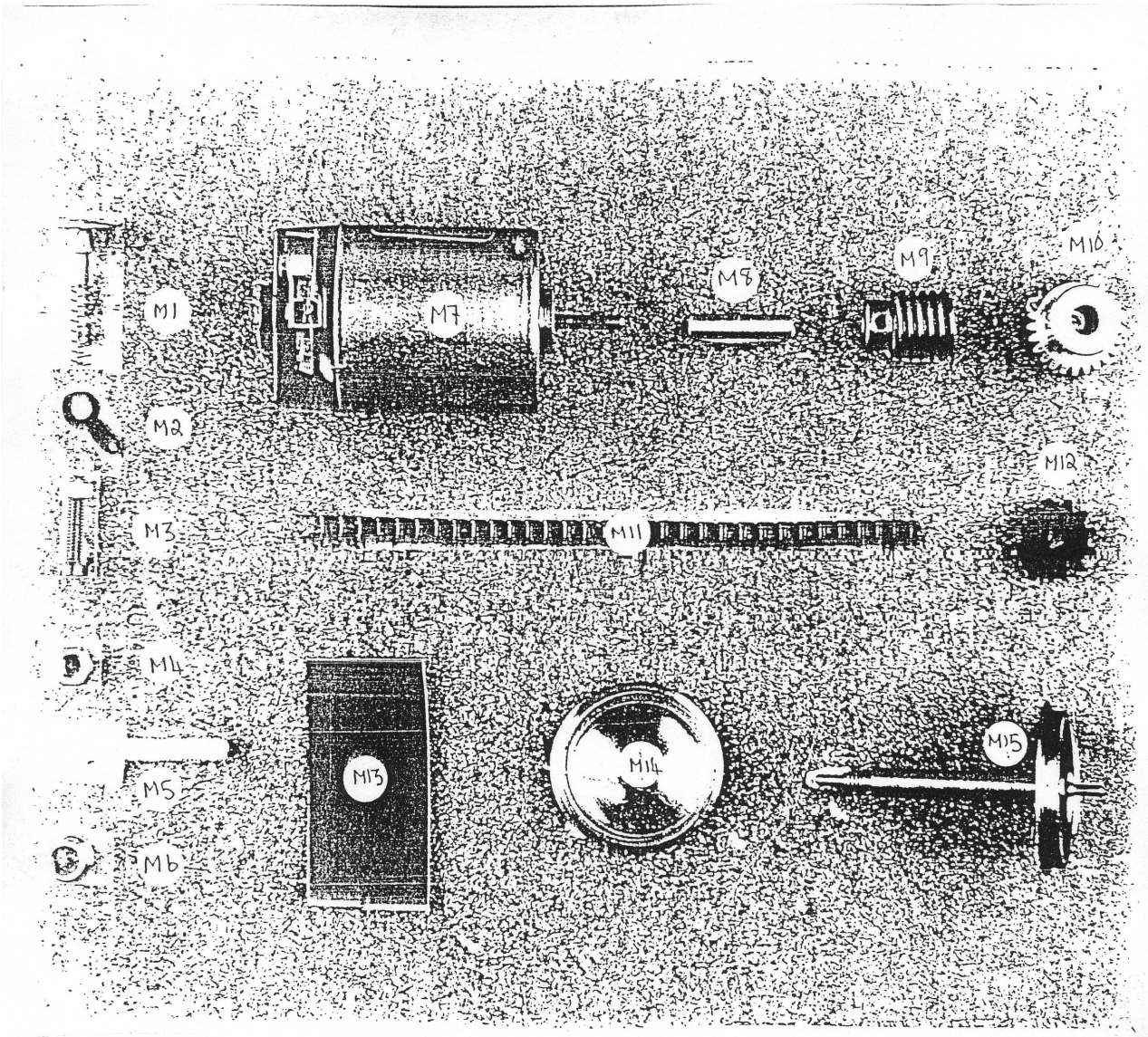

Class 35 - Miscellaneous Parts

M1	Lost wax buffer with spring	4
M2	Solder Tag	2
M3	Nut & Bolt for above	2
M4	Pivot box Nut	2
M5	Nylon Screw	2
M6	Brass wheel Bearing	8
M7	Can motor (extra to kit)	2
M8	Brass Sleeve (extra to kit)	2

M9	Steel worm	(extra to kit)
M10	Brass Gear	(extra to kit)
M11	Delrin Chain	(extra to kit)
M12	Delrin Cog	(extra to kit)
M13	Insul Pad	
M14	Steel wheel 3'9"(extra to kit)	
M15	Axle with ins. Wheel	(extra to kit)

Not illustrated: Brass channel, clear plastic, fibre washers, motor fixing screws, mesh. Worm and gear screws.

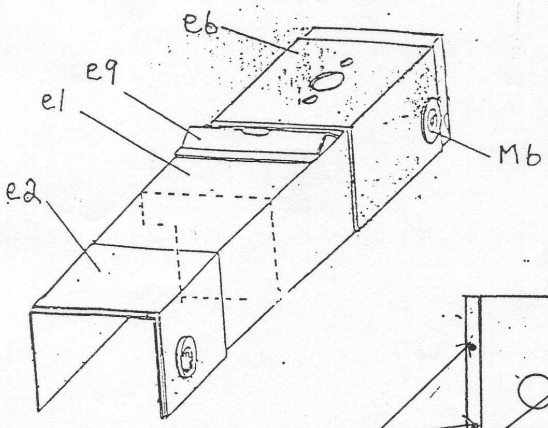

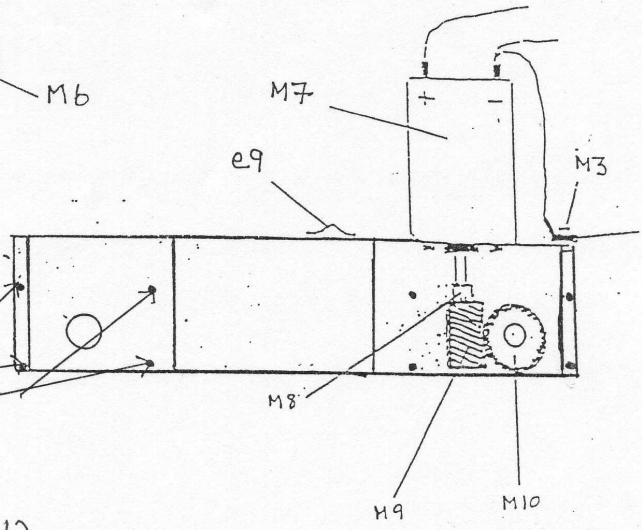

A1. use 7mm wire see page 12.

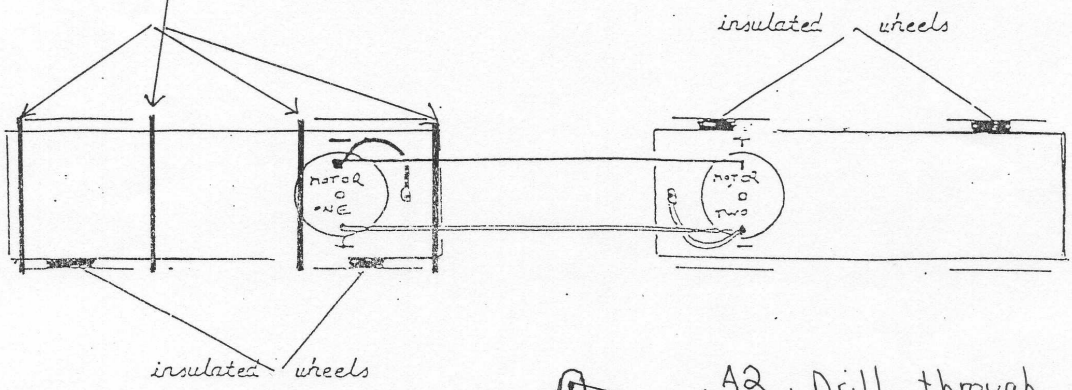

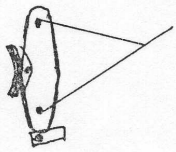

A2. Drill through

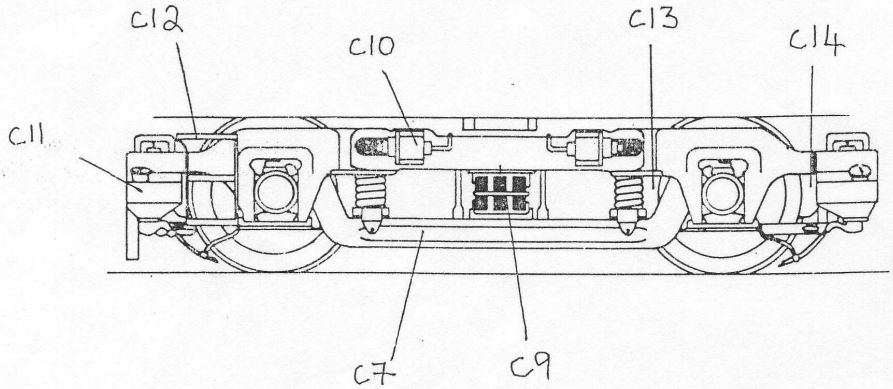

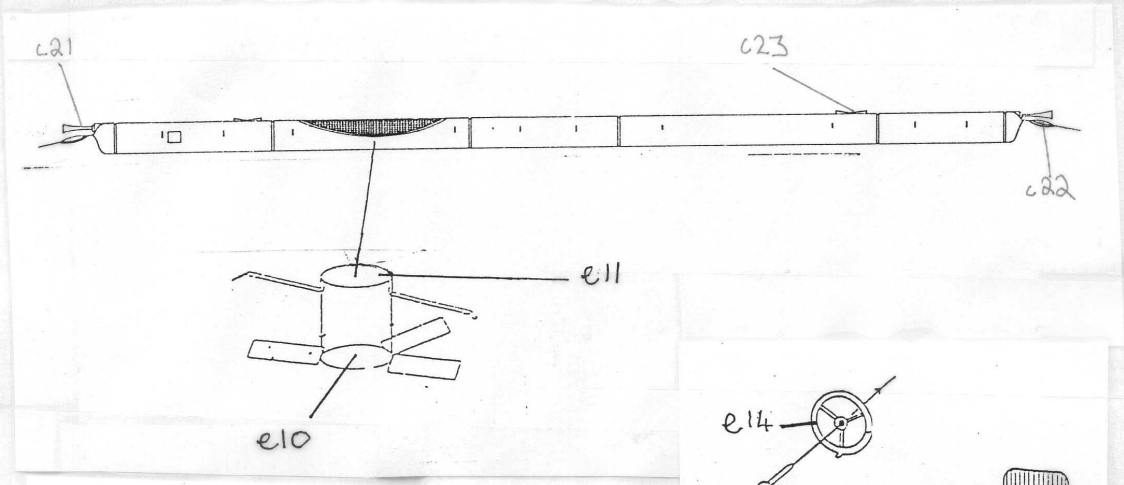
c21
c23
c22
e11
e10

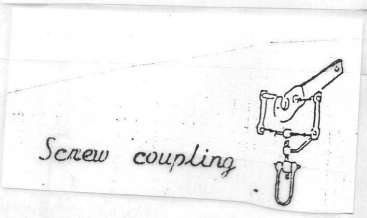
Screw coupling

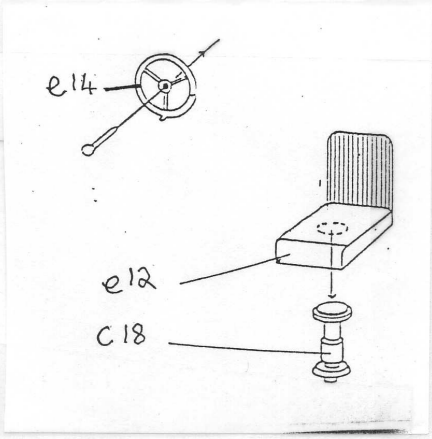
e14
e12
C18

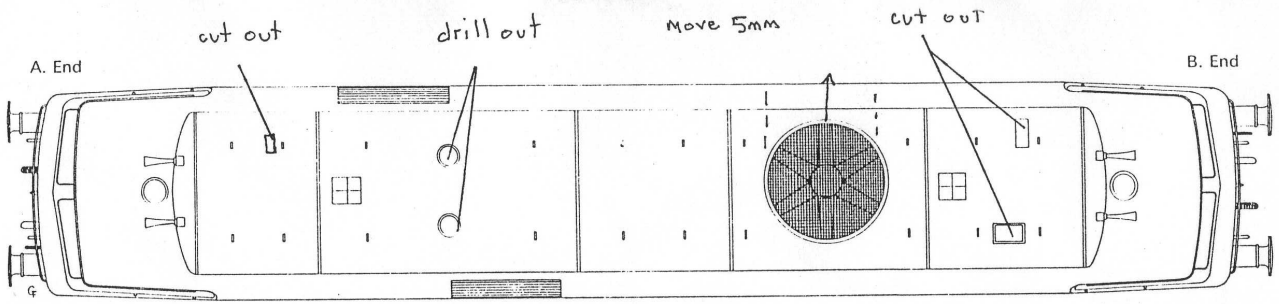
cut out
drill out
Move 5mm
cut out
A. End
B. End

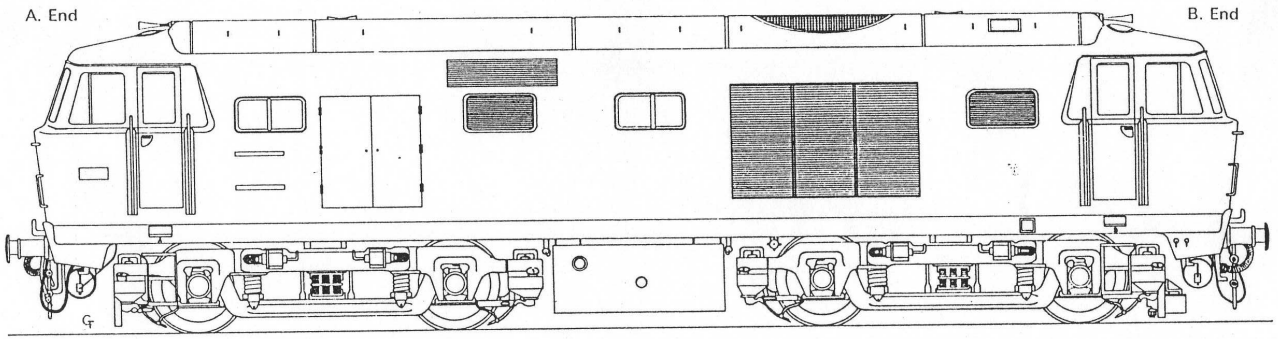
A. End
B. End

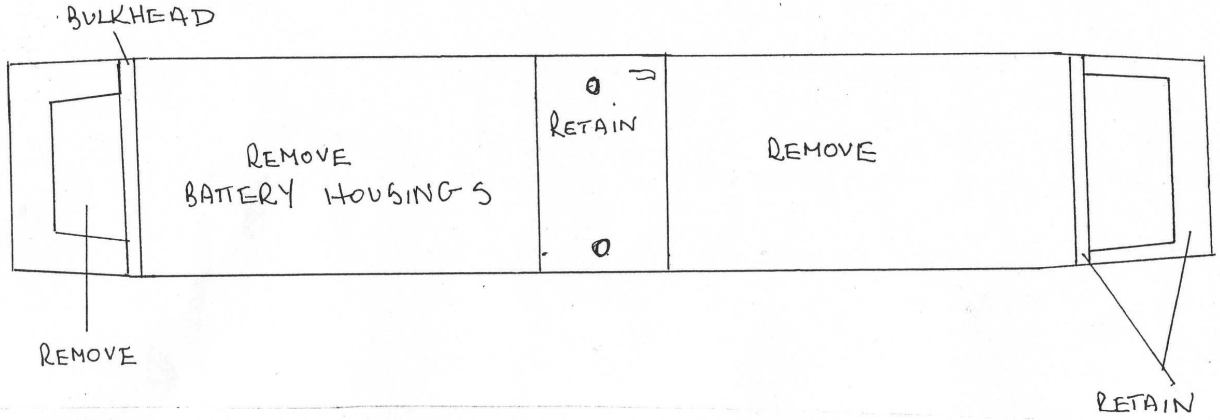
BULKHEAD
REMOVE
BATTERY HOUSINGS
RETAIN
REMOVE
REMOVE
RETAIN

Underframe Assembly

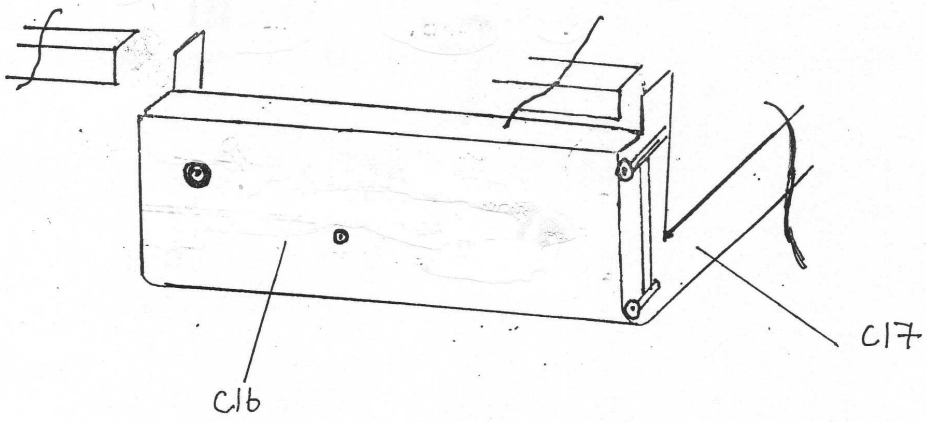

Bogie Mounting Stretcher Assembly

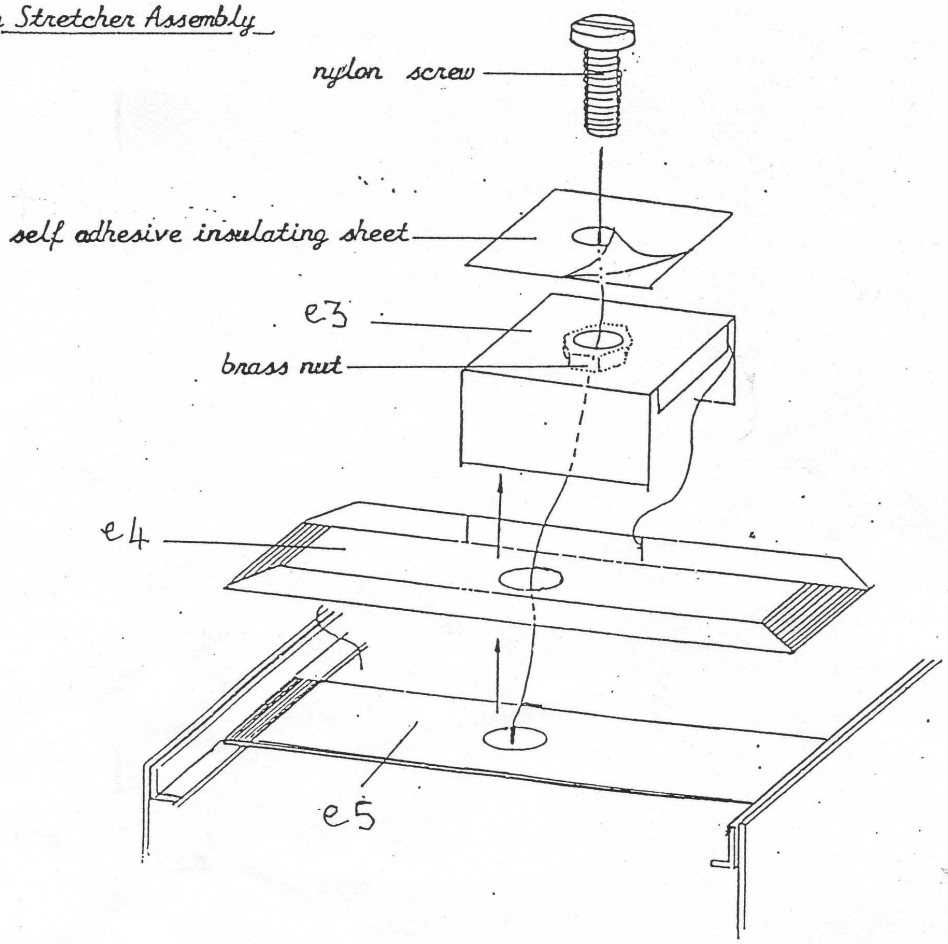

HYMEK LIVERIES

GREEN LIVERY

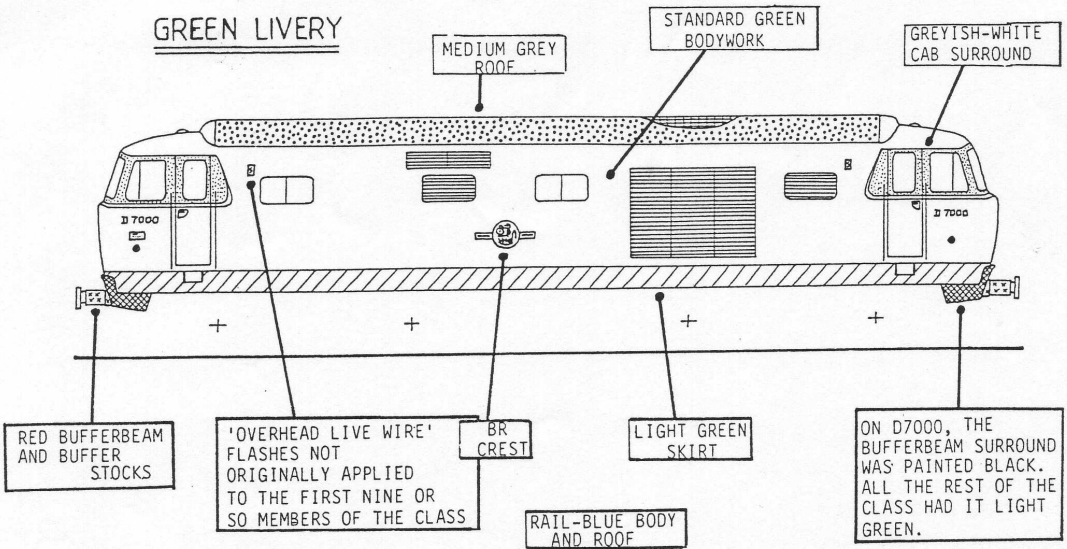

BLUE LIVERY

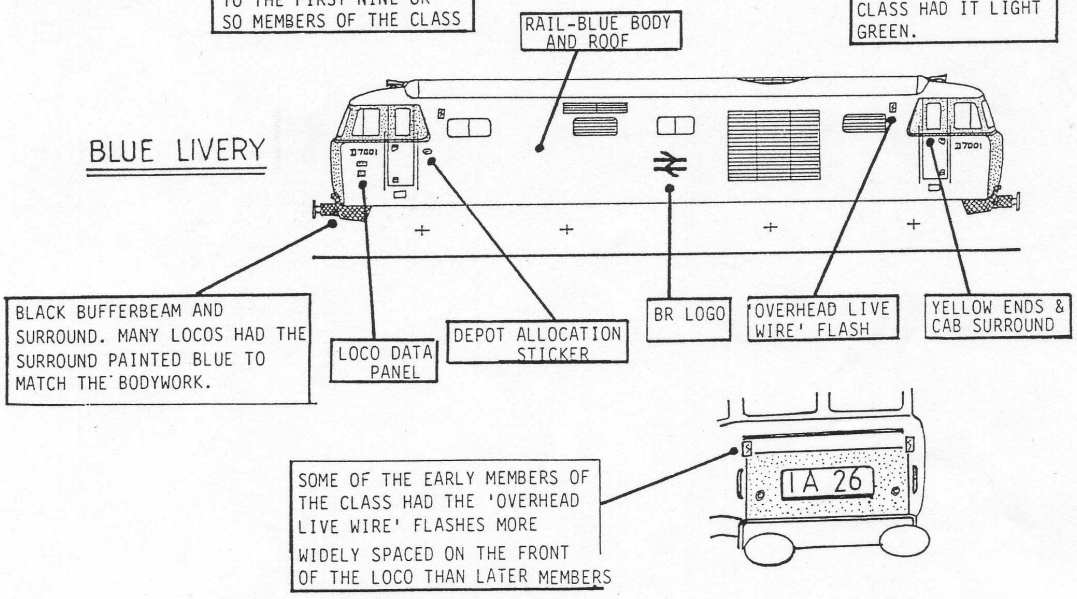

ALLOCATIONS:

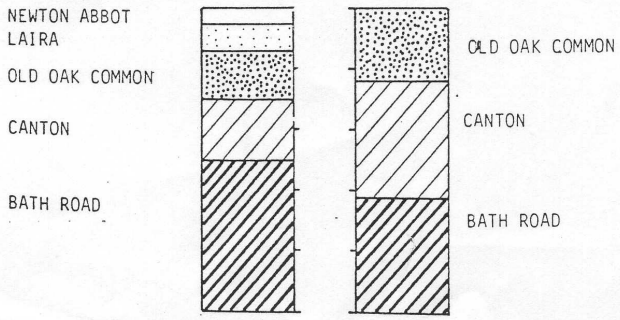

LOCOS ALSO ALLOCATED TO:

ST PHILIP'S MARSH	(DURING 7.61)
WESTBURY	(10.61 - 4.62)
LANDORE	(3.66 - 4.66)